BY APPOINTMENT TO
HER MAJESTY QUEEN ELIZABETH II
MANUFACTURER OF KITCHEN & BATHROOM TAPS & MIXERS
BARBER WILSONS & CO. LTD.
LONDON

LONDON **BARBER WILSONS & Co** EST.1905

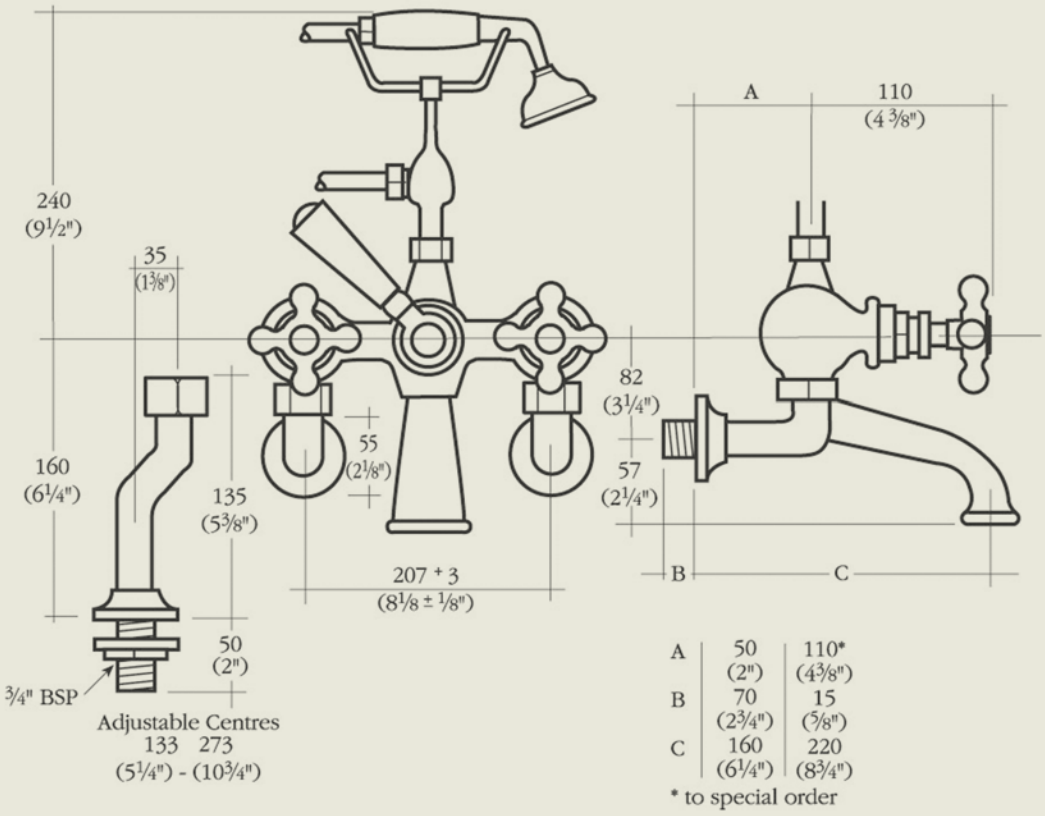

Model No.	R4300-1890
Internals	Standard-3/4 turn ceramic cartridge Optional compression cartridge available

MADE IN LONDON

info@barberwilsons.co.uk
+44 (0) 20 8888 3461

Barber Wilsons & Co Ltd, Crawley Road, London N22 6AH
REG. OFFICE. AS ABOVE · REG. NO. 100285 ENGLAND

BARBERWILSONS.COM